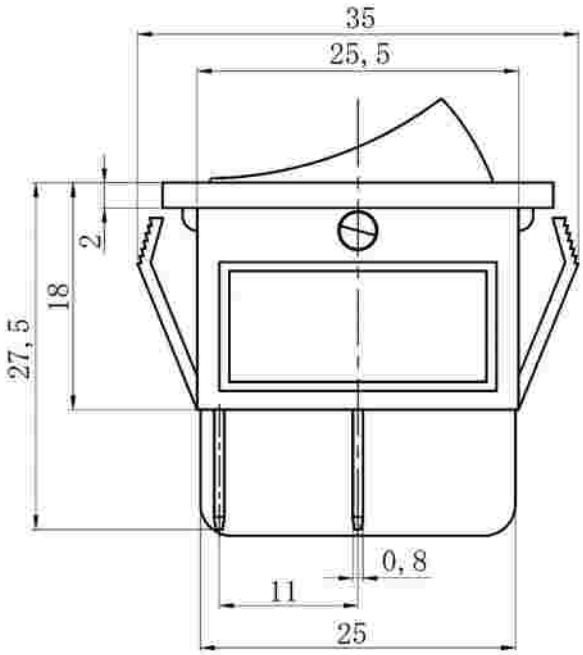
35
25, 5
2
18
27, 5
0, 8
11
25

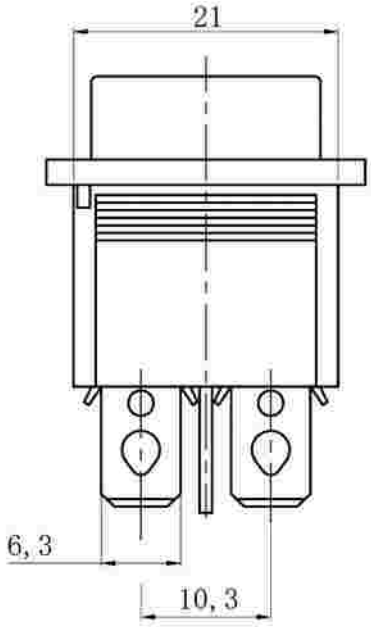
21
6, 3
10, 3

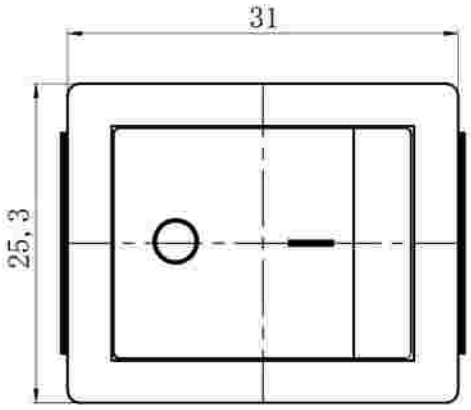
31
25, 3

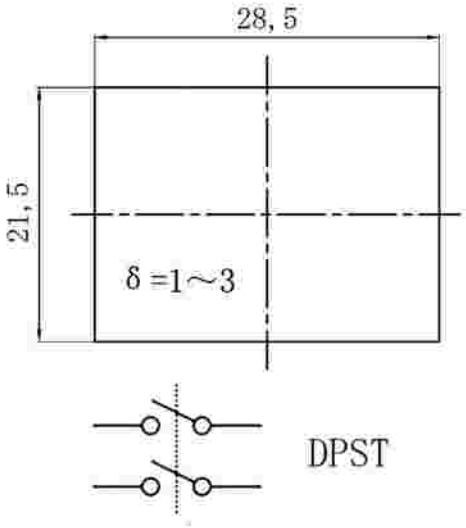
28, 5
21, 5
δ =1～3
DPST